REV. 版次	ECN.NO. ECN.编号	REVISE.NO. 处数	REVISER 修订者	APPD. 核准
R1	DRAWING			

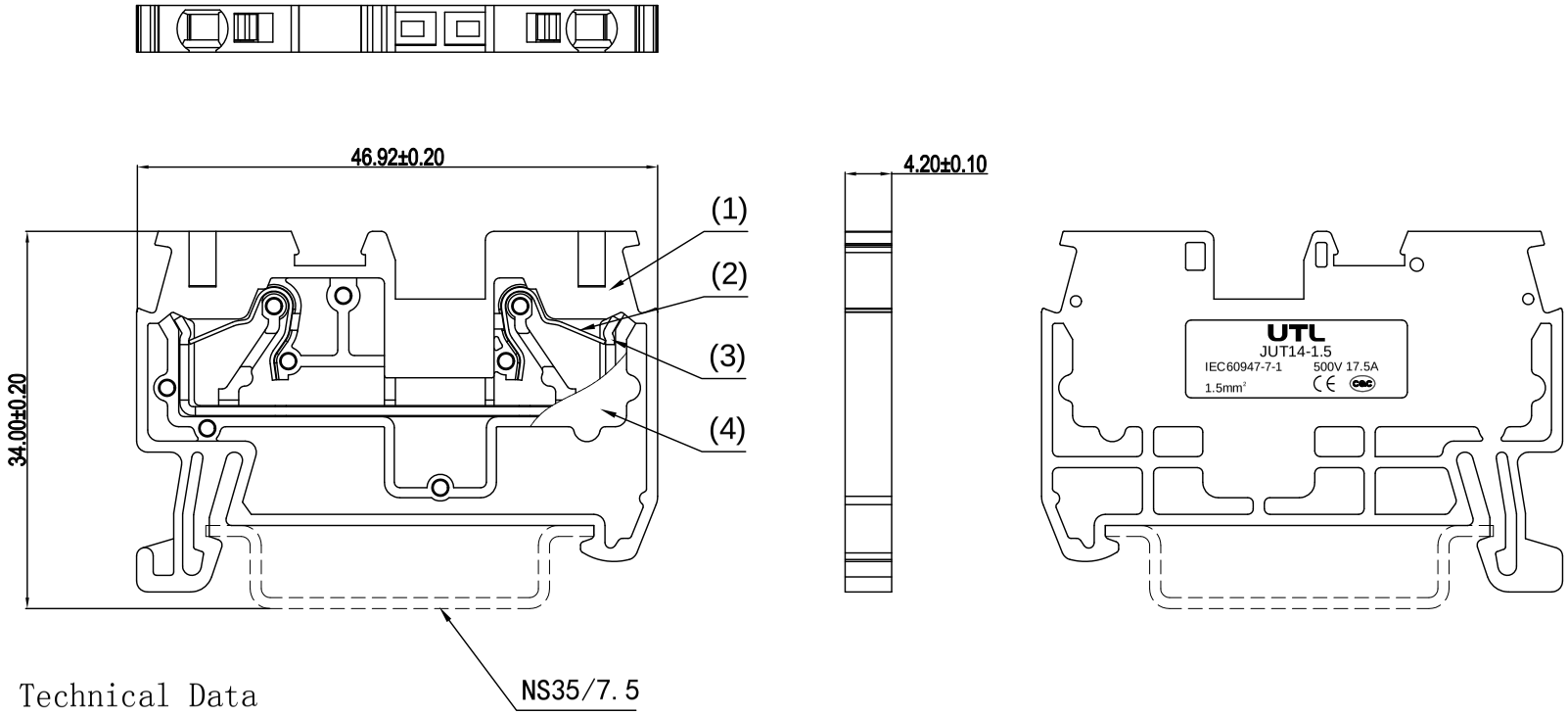

Technical Data

Material:

Body:PA66 UL94 V-0.

Conductor:Copper ,Tin Plated.

Spring:SUS 301.

Electrical:

Voltage rating/Current rating:IEC 500V/17.5 A;
UL 600V/15 A

Contact resistance:20 mΩMax.

Insulation resistance:500V,500 MΩMin.

Withstanding Voltage:AC 2500 V,1 minute.

Mechanical:

Connection Capacity:24-16AWG.

Stripping Length :10mm.

Operating temperature:-45° C to +105° C.

ZHEJIANG UTILITY ELECTRICAL CO.,LTD
浙江尤提乐电气有限公司

>120	±0.50		
>30~120	±0.30		
>6~30	±0.20		
0~6	±0.10	ANGLE	±1°
MAT'L. 材质:			

TYPE NO. 型号:	JUT14-1.5
APPD. 核准:	
CHKD. 审核:	
DR. 设计:	Jammy.ling
TITLE: 名称:	Customer Drawing
DWG. NO.: 图号:	C-DW2115-0
SCALE: 比例:	FULL
PAGE: 页码:	1/1
UNIT: 单位:	mm[inch]
REV.: 版次:	R1